Conversion Tables, Formulas and Suggested Guidelines for Horticultural Use

THE UNIVERSITY OF GEORGIA
COOPERATIVE EXTENSION

College of Agricultural and Environmental Sciences
College of Family and Consumer Sciences

Table of Contents

Table No. **Page**

1. Equivalents for liquid measure (volume) . . . 3
2. Equivalents for dry measure and weight . . . 4
3. Metric system conversion table . . . 5
4. Dilution of liquid pesticides at various concentrations . . . 5
5. Equivalent quantities of dry materials (wettable powders) for various volumes of water based on recommended pounds per 100 gallons . . . 6
6. Equivalent quantities of liquid materials (emulsion concentrates, etc.) for various volumes of water based on pints per 100 gallons . . . 6
7. Rate of application equivalent table . . . 7
8. Fertilizer conversions for specified square feet and row areas . . . 8
9. Fertilizer weight as measured by standard pot size . . . 9
10. Element concentrations for pounds soluble fertilizer in 1000 gallons (U.S.) water . . . 10
11. Injection ratios and nitrogen concentrations for constant fertilization . . . 11
12. Injector calibration with a conductivity meter . . . 12
    A. Peters Single Element Fertilizer Components. . . . 12
    B. Peters Mixed Soluble Fertilizer Analysis. . . . 13
13. Parts per million of desired nutrient to ounces of fertilizer carrier in 100 gallons of water15 (or grams in 1 liter) and vice versa . . . 14
14. Conversion factors among electrical conductivity (EC) units . . . 15
15. Various acids to add to irrigation water for acidification . . . 16
16. Amounts of nutrient sources to combine in making various fertilizer formulas . . . 17
17. Formulas for additional fertilizer calculations . . . 18
18. Miscellaneous conversions used in fertilizer calculations . . . 19
19. Osmocote® controlled-release fertilizers and their release periods . . . 20
20. Rates in lb/yd^3 (kg/m^3) for incorporation of three of the most popular formulations of Nutricote into greenhouse root substrates . . . 21
21. Materials, rates necessary to lower the pH level of greenhouse potting substrate 0.5 to 1.0 units . . 21
22. Approximate amount of materials required to change pH of potting mixes . . . 22
23. Dilution/conversion chart for various chemical growth regulators . . . 22
24. Pre-plant fertilizer sources and rates of application . . . 26
25. Cornell Peat-lite Mix A for seedlings, bedding plants and potted plants . . . 27
26. Number of pots per bushel and per cubic yard of soil mix . . . 28
27. Number of nursery containers that can be filled from 1 yd^3 of soil mix . . . 29
28. Coverage estimates for perlite, peat, topsoil and straw . . . 29
29. Plant spacing guide (greenhouse) . . . 30
30. Plant spacing guide (field/orchard) . . . 30

Landscape

31. Estimated number of plants to fill 100 ft2 bed area for square (row) and triangular (equilateral) planting patterns using 4 to 14 inch spacing distances . . . 31
32. Number of bedding/groundcover plants required at various spacing for landscape planting . . .
33. Number of plants per acre at various spacings . . . 32
34. Times required to mow or trim lawn areas . . . 33
35. Volume of water delivered - by size of hose . . . 34
36. Cubic yards of soil needed at various depths and areas . . . 34
37. Areas covered in square feet at various depths . . . 35
38. Temperature conversion . . . 35

Figure No. **Page**

1A-C. Formulas for calculating greenhouse volume . . . 36
2A-C. Formulas for calculating variously-shaped areas . . . 37

Conversion Tables, Formulas and Suggested Guidelines for Horticultural Use

Bodie V. Pennisi, Gary L. Wade, Melvin P. Garber,
Paul A. Thomas and James T. Midcap
Horticulture Department

Pesticide and fertilizer recommendations often are made on a pounds-per-acre or tons-per-acre basis for field production. However, greenhouse and nursery operators, landscape professionals and orchardists often must convert these recommendations to smaller areas, such as row feet or square feet per tree or per pot. Pints, cups, ounces, tablespoons and teaspoons often are the common units of measure. Metric units of measure can further complicate conversion.

This publication is designed to help growers make these calculations and conversions and to provide other data useful in the management, planning and operation of horticultural enterprises. A number of formulas for calculating fertilizer application rates on a parts-per-million basis are given. Tables for fertilizer injector calibration using a conductivity meter, as well as pre-plant application rates for various soil mix components and amendments, also are provided. A brief explanation of how each table is used is provided.

Tables 1 through 3 help determine equivalent measures for liquid (volume) or dry (weight) chemical substances and also converting metric to English units.

Table 1. Equivalents for liquid measure (volume)

Gallons	Quarts	Pints	Fluid Ounces	Cupfuls	Tablespoonful	Teaspoonful	Milliliters	Liters
1	4	8	128	16	256	768	3785	3.785
-	1	2	32	4	64	192	946	0.946
-	-	1	16	2	32	96	473	0.473
-	-	-	1	⅛	2	6	30	0.030
-	-	-	-	1	16	48	236	0.236
-	-	-	-	-	1	3	15	0.015
-	-	-	-	-	-	1	5	0.005
-	-	-	-	-	-	-	1	0.001

Table 2. Equivalents for dry measure and weight

Dry measure

3 level teaspoonfuls	= 1 level tablespoonful
16 level tablespoonfuls	= 1 cupful
2 cupfuls	= 1 pint
2 pints	= 1 quart

Weight

Pounds/Ounces	Metric
220.46 pounds	100 kilograms (kg)
100 pounds	45.349 kilograms
2.204 pounds	1 kilogram
1.102 pounds	500 grams (g)
1 pound/16 ounces	453.5900 grams
8 ounces	226.78 grams
4 ounces	113.39 grams
3.527 ounces	110 grams
2 ounces	56.70 grams
1 ounce	28.35 grams
3/4 ounce	21.25 grams
1/2 ounce	14.17 grams
1/4 ounce	7.08 grams
1/8 ounce	3.54 grams
1/16 ounce	1.77 grams
1/32 ounce	885 milligrams
1/64 ounce	442 milligrams
1/128 ounce ..	221 milligrams

Ounces-to-Grams

Ounces	Grams
3/8	10.631
1/2	14.75
5/8	17.718
3/4	21.162
7/8	24.805
1 ..	28.349
2.	56.698
1/256	0.111
1/128	0.221
1/64	0.443
1/32	0.886
1/16	1.772
1/8	3.544
1/4	7.087

Table 3. Metric system conversion table

Liquid capacity	
1 fluid ounce (fl oz) =	30 milliliters (ml)
1 pint (pt) = 16 fl oz =	473 ml
1 quart (qt) =	946 ml
1 gallon (gal) =	3,785 ml
1 liter =	1,000 ml
1 milliliter (ml) =	1 cubic centimeter (cc)
Dry material capacity	
1 ounce (avoirdupois) =	28.4 grams (g)
1 pound (lb) =	453.6 g
1 kilogram (kg) =	1,000 g = 2.2 lb
Volume	
1 cubic inch (in^3) =	16.4 milliliters (ml)
1 cubic foot (ft^3) =	7.48 gal = 28.3 liters (l)
1 bushel (bu) =	1.24 ft^3 = 35.2 liters
1 cubic yard (yd^3) =	21.7 bu = 765 liters
Linear	
1 inch (in) =	2.54 centimeters (cm)
1 foot (ft) =	30.48 cm
1 yard (yd) =	91.44 cm
1 meter (m) =	100 cm
Area	
1 square inch (in^2) =	6.45 square centimeters (cm^2)
1 square foot (ft^2) =	0.09 square meter (m^2)
1 square yard (yd^2) =	0.84 square meter (m^2)
1 acre (a) =	0.40 hectare (ha)
1 square mile (M^2) =	2.59 square kilometer (km^2)

Tables 4 through 7 help determine correct application rates for various pesticides.

Table 4. Dilution of liquid pesticides at various concentrations

	Amount Desired			
Dilution	**1 Gal**	**3 Gal**	**Gal**	**5 Gal**
1:100	2 tbs + 2 tsp	½ cup	¾ cup + 5 tsp	1 cup + 3 tbs
1:200	4 tsp	¼ cup	6½ tbs	½ cup + 2 tbs
1:400	2 tsp	2 tbs	3 tbs	4 tbs + 2½ tsp
1:800	1 tsp	1 tbs	1 tbs + 2 tsp	3 tbs + 2½ tsp
1:1000	¾ tsp	2¼ tsp	1 tbs + 1 tsp	1 pt + ½ cup

Example: Directions call for a 1:200 dilution. To prepare 3 gal of finished product, you would need to add ¼ cup.

Table 5. Equivalent quantities of dry materials (wettable powders) for various volumes of water based on recommended pounds per 100 gallons

	Recommended Rate					
Water	**1 lb**	**2 lb**	**lb**	**4 lb**	**5 lb**	**6 lb**
50 gal	½ lb	1 lb	1½ lb	2 lb	2½ lb	3 lb
25 gal	4 oz	8 oz	12 oz	1 lb	1¼ lb	1½ lb
12.5 gal	2 oz	4 oz	6 oz	8 oz	10 oz	¾ lb
5 gal	3 tbs	1½ oz	2½ oz	3¼ oz	4 oz	5 oz
1 gal	1 tsp	2 tsp	1 tbs	4 tsp	5 tsp	2 tbs

Example: Directions for use specify a rate of 4 lb per 100 gal of water. To prepare 1 gal of solution would require 4 tsp of material.

Table 6. Equivalent quantities of liquid materials (emulsion concentrates, etc.) for various volumes of water based on pints per 100 gallons

Water	Recommended Rate					
100 gal	**½ pt**	**1 pt**	**2 pt**	**3 pt**	**4 pt**	**5 pt**
50 gals	4 fl oz	8 fl oz	1 pt	1½ pt	2 pt	2½ pt
25 gals	2 fl oz	4 fl oz	8 fl oz	12 fl oz	1 pt	1¼ pt
12.5 gals	1 fl oz	2 fl oz	4 fl oz	6 fl oz	8 fl oz	10 fl oz
5 gals	1 tbs	1 fl oz	2 fl oz	2½ fl oz	3 fl oz	4 fl oz
1 gal	½ tsp	1 tsp	2 tsp	3 tsp	4 tsp	5 tsp

Example: Directions for use specify a rate of 4 pt per 100 gal of water. To prepare 5 gal of solution would require 3 fl oz of material.

Table 7. Rate of application equivalent table		
Rate per Acre	**Rate per 1000 sq ft**	**Rate per 100 sq ft**
LIQUID MATERIALS		
1 pt	¾ tbs	¼ tsp
1 qt	1½ tbs	½ tsp
1 gal	6 tbs	2 tsp
25 gal	4⅔ pt	½ pt
50 gal	4⅔ qt	1 pt
100 gal	2⅓ gal	1 qt
200 gal	4⅔ gal	2 qt
300 gal	7 gal	3 qt
400 gal	9¼ gal	1 gal
500 gal	11½ gal	1¼ gal
DRY MATERIALS		
1 lb	2½ tsp	¼ tsp
3 lb	2¼ tbs	¾ tsp
4 lb	3 tbs	1 tsp
5 lb	4 tbs	1¼ tsp
10 lb	½ cup	2 tsp
100 lb	2¼ lb	¼ lb
200 lb	4⅔ lb	½ lb
300 lb	7 lb	¾ lb
400 lb	9¼ lb	1 lb
500 lb	11½ lb	1¼ lb
Examples: For liquid materials, 100 gal per acre is equivalent to 2⅓ gal per 1000 ft^2 or 1 qt per 100 ft^2. For dry materials, 4 lb per acre is equivalent to 3 tbs per 1000 ft^2 or 1 tsp per 100 ft^2.		

Tables 8 through 9 help determine the correct application rates for fertilizers when nutrition recommendations are based on fertilizer weight.

Table 8. Fertilizer conversions for specified square feet and row area

Material Grouped by Approximate Weight per Pint	Fertilizer Rate for Specific Areas					Per 10 feet of row spaced**		
	Recommended rate per acre* lb	100 sq ft lb	1000 sq ft lb	10 sq ft tbs	100 sq ft pt	1 ft tbs	2 ft tbs	3 ft cup
10 oz per pint								
Sulfur or	100	0.2	2.3	1.2	0.4	1.2	2.4	0.2
Dried Blood	500	1.2	11.5	6.0	1.9	6.0	12.0	1.1
	1000	2.3	23.0	12.0	3.7	-	-	--
13 oz per pint								
Urea or	100	0.2	2.3	0.9	0.3	0.9	1.8	0.2
Ammonium Nitrate or	500	1.2	11.5	4.5	1.4	4.5	9.0	0.8
Ammonium Chloride	1000	2.3	23.0	9.0	2.8	-	-	-
16 oz per pint								
Ammonium Phosphate or	100	0.2	2.3	0.7	0..2	0.7	1.4	0.1
Potassium Chloride or	500	1.2	11.5	3.5	1.2	3.5	7.0	0.7
Gypsum or	1000	2.3	23.0	7.0	2.3	-	-	-
Mixed Fertilizers								
19 oz per pint								
Calcium Nitrate or	100	0.2	2.3	0.6	0.2	0.6	1.2	0.1
Ammonium Sulfate or	500	1.2	11.5	3.0	1.0	3.0	6.0	0.6
Superphosphate	1000	2.3	23.0	6.0	2.0	-	-	-
23 oz per pint								
Ground Limestone or	100	0.2	2.3	0.5	0.2	0.5	1.0	0.1
	500	1.2	11.5	2.5	0.8	2.5	5.0	0.5
Potassium Sulfate	1000	2.3	23.0	5.0	1.6	-	-	-
	2000	4.6	46.0	10.0	3.2	--	--	--

* Any of the materials listed in the first column can be used at the rates shown below. **High Rates, not desirable in row fertilization, are omitted in the table. **Example:** You wish to apply calcium nitrate at the rate of 500 lbs per acre. It weighs approximately 19 oz per pt. For application to 100 ft^2, you need 1.2 lb or 1.0 pt.

Table 9. Fertilizer weight as measured by standard pot size

Fertilizer	Pot Size					
	2¼"	**3"**	**3½"**	**4"**	**5"**	**6"**
Ammonium nitrate	2 oz	5½ oz	9 oz	15 oz	1 lb 12 oz	2 lb 15 oz
Urea, 45-0-0	2½ oz	6 oz	9 oz	1 lb	1 lb 13 oz	3 lb
Superphosphate	2½ oz	6 oz	9½ oz	1 lb	1 lb 14 oz	3 lb 2 oz
Dusting sulfur	2½ oz	6 oz	10 oz	1 lb	1 lb 14 oz	3 lb 3 oz
Peters, 20-5-30	2½ oz	6 oz	10 oz	1 lb 1 oz	1 lb 15 oz	3 lb 3 oz
Ammonium sulfate	3 oz	7 oz	11 oz	1 lb 3 oz	2 lb 3 oz	3 lb 11 oz
Osmocote, 14-14-14	3 oz	7½ oz	12 oz	1 lb 4 oz	2 lb 5 oz	3 lb 13 oz
MagAmp, 12-62-0	3 oz	7½ oz	12 oz	1 lb 4 oz	2 lb 5 oz	3 lb 14 oz
Gypsum, $CaSO_4$	3 oz	8 oz	12½ oz	1 lb 5 oz	2 lb 7 oz	4 lb 1 oz
Calcium nitrate	3 oz	8 oz	12½ oz	1 lb 6 oz	2 lb 8 oz	4 lb 2 oz
Peters, 15-0-15	3½ oz	8 oz	13 oz	1 lb 6 oz	2 lb 9 oz	4 lb 5 oz
Potassium chloride	3½ oz	9 oz	14 oz	1 lb 8 oz	2 lb 12 oz	4 lb 9 oz
Sodium nitrate	4 oz	9 oz	15 oz	1 lb 9 oz	2 lb 14 oz	4 lb 13 oz
Dolomitic limestone	5½ oz	13 oz	1 lb 5 oz	2 lb 4 oz	4 lb 2 oz	6 lb 14 oz

Clay flower pots are frequently used for fertilizer measurement by greenhouse operators. The above shows average weights of several representative fertilizers as measured by standard clay pots when level full. The 3-inch standard is considered to contain 8 fl oz or 1 cup. Since the actual pot size varies with the manufacturer and the volume of a given weight of fertilizer varies with moisture and compaction, deviations of 10 percent may be expected but up to 40 percent may occur.

Tables 10 through 14 help determine the correct application rates for fertilizers with various analysis when nutrition recommendations are based on parts per million and fertilizer injectors are used to deliver liquid plant fertilizer. Table 12 is designed to help growers calibrate their injectors.

Table 10. Element concentrations for pounds soluble fertilizer in 1000 gal (U.S.) water

Desired ppm	Pounds of Fertilizer Needed												
	% Nitrogen (N)					% Phosphate (P_2O_5)				% Potash (K_2O)			
	30	25	20	15	10	20	15	10	5	25	20	15	10
300	8.3	10.0	12.5	16.7	23.0	--	--	--	--	12.0	15.0	20.0	30.0
275	7.8	9.2	11.4	15.3	23.0	--	--	--	--	11.0	13.7	18.2	27.5
250	7.3	8.4	10.2	13.9	21.8	--	--	--	--	10.0	12.5	16.7	26.2
225	6.2	7.5	9.3	12.5	18.7	--	--	--	--	9.0	11.3	15.0	22.5
200	5.6	6.7	8.4	11.1	16.7	19.2	--	--	--	8.0	10.0	13.3	20.0
175	4.9	5.8	7.3	9.7	14.6	16.8	22.4	--	--	7.0	8.8	10.7	17.5
150	4.2	5.0	6.3	8.3	12.5	14.4	19.2	28.8	--	6.0	7.6	10.0	15.0
125	3.5	4.2	5.3	7.0	10.2	12.0	16.0	24.0	48.0	5.0	6.2	8.4	12.5
100	2.8	3.4	4.2	5.6	8.3	9.6	12.6	19.2	38.4	4.0	5.0	6.7	10.0
75	2.1	2.5	3.1	4.2	6.2	7.2	9.6	14.4	28.8	3.0	3.8	5.0	7.5
50	1.4	1.7	2.1	2.8	4.2	4.8	6.4	9.6	19.2	2.0	2.5	3.4	5.0
25	0.7	0.9	1.1	1.4	2.1	2.4	3.2	4.8	9.6	1.0	1.3	1.7	2.5

Example: You wish to apply 200 ppm N using a 20-10-20 soluble fertilizer. Reading across from 200 ppm under the 20 percent N column, you find 8.4 lb are needed for 1000 gal water. **NOTES:** 1 oz/2 gal is about 30 lb/1000 gal; 1 oz/3 gal is about 20 lb/100 gal; 1 oz/5 gal is about 12 lb/1000 gal. 1 oz/gal = 7490 ppm; 1 oz/100 gal = 75 ppm. To determine parts per million (ppm) of an element in a fertilizer, simply multiply the percent of that element by 75. The answer will be the ppm of the element per oz of the fertilizer in 100 gal of water. As an example, ammonium sulfate contains approximately 20 percent nitrogen. Twenty percent multiplied by 75 is 15, which is the ppm of nitrogen in 1 oz of ammonium sulfate per 100 gal of water.

Table 11. Injection ratios and nitrogen concentrations for constant fertilization[1]							
oz fertilizer per gal concentrate				oz fertilizer per gal concentrate			
	100 ppm N	150 ppm N	200 ppm N		100 ppm N	150 ppm N	200 ppm N
Ratio	**30% N formula[a]**			**Ratio**	**20% N formula[c]**		
1:300	13.5	20.2	27.0	1:300	20.2	30.3	40.5
1:200	9.0	13.5	18.0	1:200	13.5	20.2	27.0
1:150	6.7	10.1	13.5	1:150	10.1	15.1	20.2
1:128	5.7	8.6	11.5	1:128	8.6	12.9	17.2
1:100	4.5	6.7	9.0	1:100	6.7	10.1	13.5
1:50	2.2	3.3	4.5	1:50	3.3	5.0	6.7
1:30	13	2.0	2.7	1:30	2.0	3.0	4.0
1:24	1.0	1.6	2.1	1:24	1.6	2.4	3.2
1:15	0.67	1.0	1.3	1:15	1.0	1.5	2.0
	25% N formula[b]				**15% N formula[d]**		
1:300	16.5	24.7	33.0	1:300	27.0	40.5	54.0
1:200	11.0	16.5	22.0	1:200	18.0	27.0	36.0
1:150	8.2	12.3	16.5	1:150	13.5	20.2	27.0
1:128	7.0	10.5	14.0	1:128	11.5	17.2	23.0
1:100	5.5	8.2	11.0	1:100	9.0	13.5	18.0
1:50	2.7	4.1	5.5	1:50	4.5	6.7	9.0
1:30	1.6	2.4	3.3	1:30	2.7	4.0	5.4
1:24	1.3	1.9	2.6	1:24	2.1	3.2	4.3
1:15	0.82	1.2	1.6	1:15	1.3	2.0	2.7

[1]From Ball RedBook, 16th Edition, published by Ball Publishing. Reprinted with permission
[a]e.g, 30-10-10
[b]e.g., 25-5-20, 25-10-10, 25-0-25
[c]e.g., 20-20-20, 20-5-30, 21-7-7
[d]e.g., 15-15-15, 15-30-15, 16-4-12

Table 12. Injector calibration with a conductivity meter[1]

A. Peters Single Element Fertilizer Components

ppm Nitrogen	Ammonium Nitrate - NH_4NO_3 34% N	Ammonium Sulfate $(NH_4)_2SO_4$ 21% N	Sodium Nitrate $NaNO_3$ 16% N	Potassium Nitrate - KNO_3 14% N	Calcium Nitrate $Ca(NO_3)_2$ 15.5% N	Epsom Salt $MgSO_4$ 10% Mg
50	0.23	0.45	0.43	0.48	0.37	0.38
75	0.35	0.68	0.65	0.71	0.55	0.56
100	0.46	0.90	0.86	0.95	0.74	0.75
125	0.58	1.13	1.08	1.18	0.92	0.94
150	0.69	1.35	1.29	1.42	1.11	1.13
175	0.81	1.58	1.51	1.66	1.30	1.31
200	0.92	1.90	1.72	1.90	1.48	1.50
225	1.04	2.03	1.94	2.14	1.66	1.69
250	1.15	2.25	2.15	2.37	1.85	1.88
275	1.27	2.48	2.37	2.61	2.04	2.06
300	1.38	2.70	2.58	2.85	2.22	2.25
350	1.61	3.15	3.01	3.32	2.59	2.63
400	1.84	3.60	3.44	3.80	2.96	3.00
450	2.07	4.05	3.87	4.27	3.33	3.38
500	2.30	4.50	4.30	4.75	3.70	3.75
550	2.53	4.95	4.73	5.22	4.07	4.13
600	2.76	5.40	5.16	5.70	4.44	4.50
650	2.99	5.85	5.59	6.17	4.81	4.88
700	3.22	6.30	6.02	6.65	5.18	5.25
750	3.45	6.75	6.45	7.12	5.50	5.63
800	3.68	7.20	6.88	7.60	5.92	6.00
850	3.91	7.65	7.31	8.07	6.29	6.38
900	4.14	8.10	7.74	8.55	6.66	6.75
950	4.37	8.55	8.17	9.02	7.03	7.13
1000	4.60	9.00	8.60	9.50	7.40	7.50

[1] Adapted from Grace Horticultural Products. W.R. Grace & Co. Cambridge, Massachusetts 02140.

NOTES: 1) For use with meters in millimhos with Peters® Single Element Fertilizer Components.
2) These are readings made with distilled water.
3) Test your plain irrigation water first and subtract that reading from the fertilizer-injected water. For example, your water test indicates 0.5 mmhos and you are applying 500 ppm N with calcium nitrate. Your calibration reading is 3.70 - 0.5 = 3.20 mmhos.

B. Peters Mixed Soluble Fertilizer Analysis

ppm N	20-20-20 20-19-18	20-10-15	20-5-30	25-5-20	25-10-10 30-10-10	5-11-26 Hydrosol	15-16-17 15-11-29 15-20-25	15-15-15	15-10-30	15-30-15	15-0-15	16-4-12	21-7-7 Acid	21-7-7 Neutral
50	0.23	0.31	0.22	0.12	0.09	1.00	0.32	0.30	0.32	0.31	0.36	0.32	0.28	0.21
75	0.34	0.47	0.33	0.18	0.14	1.50	0.48	0.46	0.51	0.47	0.55	0.48	0.42	0.32
100	0.45	0.62	0.44	0.24	0.18	2.00	0.65	0.62	0.70	0.62	0.74	0.64	0.56	0.42
125	0.56	0.78	0.56	0.30	0.23	2.50	0.82	0.79	0.87	0.78	0.94	0.81	0.70	0.53
150	0.68	0.93	0.69	0.36	0.27	3.00	1.00	0.96	1.50	0.93	1.15	0.98	0.84	0.63
175	0.79	1.09	0.81	0.43	0.32	3.50	1.20	1.13	1.23	1.09	1.35	1.14	0.98	0.74
200	0.90	1.24	0.94	0.51	0.36	4.00	1.40	1.30	1.41	1.24	1.55	1.31	1.12	0.84
225	1.01	1.40	1.07	0.57	0.41	4.50	1.56	1.47	1.59	1.40	1.72	1.47	1.26	0.95
250	1.13	1.55	1.20	0.62	0.47	5.00	1.72	1.65	1.78	1.55	1.90	1.62	1.40	1.05
275	1.24	1.71	1.32	0.71	0.51	5.50	1.91	1.82	1.95	1.71	2.09	1.81	1.54	1.16
300	1.35	1.86	1.43	0.80	0.54	6.00	2.10	1.98	2.12	1.86	2.28	2.00	1.68	1.26
350	1.58	2.17	1.66	0.92	0.64	6.50	2.45	2.31	2.45	2.17	2.64	2.29	1.96	1.47
400	1.80	2.48	1.90	1.04	0.74	7.00	2.80	2.65	2.78	2.48	3.00	2.58	2.24	1.68
450	2.03	2.79	2.15	1.18	0.85	7.50	3.15	2.98	3.12	2.79	3.34	2.93	2.52	1.89
500	2.25	3.10	2.40	1.32	0.96	8.00	3.50	3.25	3.46	3.10	3.68	3.28	2.80	2.10
550	2.48	3.41	2.61	1.45	1.06	-	3.84	3.55	3.76	3.41	3.98	3.57	3.08	2.31
600	2.70	3.72	2.82	1.58	1.16	-	4.18	3.85	4.06	3.72	4.28	3.86	3.36	2.52
650	2.93	4.03	3.03	1.71	1.26	-	4.52	4.15	4.36	4.03	4.58	4.15	3.64	2.73
700	3.15	4.34	3.24	1.84	1.36	-	4.80	4.45	4.66	4.34	4.88	4.44	3.92	2.94
750	3.38	4.65	3.45	1.98	1.46	-	5.20	4.75	4.95	4.65	5.20	4.72	4.20	3.15
800	3.60	4.96	3.66	2.11	1.56	-	5.54	5.05	5.25	4.96	5.50	4.98	4.48	3.36
850	3.83	5.27	3.87	2.24	1.66	-	5.88	5.35	5.55	5.27	5.80	5.24	4.76	3.57
900	4.05	5.58	4.08	2.37	1.76	-	6.22	5.65	5.85	5.58	6.10	5.50	5.04	3.78
950	4.28	5.89	4.29	2.50	1.86	-	6.56	5.95	6.15	5.89	6.40	5.76	5.32	3.99
1000	4.50	6.20	4.5	2.63	1.96	-	6.90	6.25	6.45	6.20	6.70	6.00	5.60	4.20

NOTES: 1) For use with meters in millimhos with Peters® Fertilizer formulations. 2) These readings are made with distilled water. 3) Test your plain irrigation water first and subtract that reading from the fertilizer-injected water. For example, your water test indicates 0.2 mmhos and you are applying 200 ppm N with 15-15-15 fertilizer. Your calibration reading is 1.30 - 0.2 = 1.10 mmhos.

Table 13. Parts per million of desired nutrient to ounces of fertilizer carrier in 100 gallons of water (or grams in 1 liter) and vice versa[1]

Ounces of Fertilizer Carrier in 100 Gallons	Percentage of Desired Nutrient in Fertilizer Carrier													
	12	**13**	**14**	**15.5**	**16**	**20**	**20.5**	**21**	**33**	**44**	**45**	**53**	**60**	**62**
1	9	9.7	10.5	11.6	12.0	15.0	15.3	15.7	24.7	32.9	33.7	39.7	44.9	46.4
2	18	19.5	21.0	23.2	24.0	29.9	30.7	31.4	49.4	65.9	67.4	79.3	89.8	92.0
3	27	29.3	31.4	35.0	35.9	44.9	46.0	47.2	74.1	98.8	101.0	117.0	134.7	139.2
4	36	38.9	41.9	46.4	47.9	59.9	61.4	62.9	98.8	131.7	134.7	158.7	179.6	185.6
6	54	58.4	62.9	70.0	71.9	89.9	92.1	94.3	148.2	197.6	202.1	238.0	269.4	278.4
8	72	77.8	83.8	92.8	95.8	119.7	122.7	125.7	197.6	263.4	269.4	317.3	359.2	371.2
16	144	155.7	167.7	185.6	191.7	239.5	245.5	251.5	395.2	526.9	538.9	634.6	718.5	742.4
24	216	233.5	251.5	278.4	287.5	359.2	368.2	377.2	592.7	790.3	808.3	952.0	1077.7	1113.6
32	288	311.4	335.4	371.3	383.4	479.0	490.9	502.9	790.3	1053.7	1077.7	1269.3	1436.9	1484.8
40	359	389.2	419.2	464.0	479.2	598.7	613.7	628.6	987.9	1317.2	1347.1	1586.6	1796.2	1856.1
48	431	467.0	503.0	556.8	575.0	718.5	736.4	754.4	1185.5	1580.6	1616.5	1903.9	2155.4	2227.2
56	503	544.7	586.9	649.7	670.9	838.2	859.2	880.1	1383.0	1844.0	1886.0	2221.2	2514.6	2598.4
64	575	622.7	670.7	742.4	766.7	958.0	981.9	1005.8	1580.6	2107.5	2155.4	2538.6	2873.9	2969.7
Grams of Fertilizer Carrier in 1 Liter	**ppm**													
0.1	12	13	14	16	16	20	20.5	21	33	44	45	53	60	62
0.2	24	26	28	31	3	40	41.0	42	66	88	90	106	120	124
0.3	36	39	42	47	48	60	61.5	63	99	132	135	159	180	186
0.4	48	52	56	62	64	80	82.0	84	132	176	180	212	240	248
0.6	72	78	84	93	96	120	123.0	126	198	264	270	318	360	372
0.8	96	104	112	124	128	160	164.0	168	264	352	360	424	480	496
1.0	120	130	140	155	160	200	205.0	210	330	440	450	530	600	620
1.5	180	195	210	233	240	300	307.0	315	495	660	675	795	900	930
2.0	240	260	280	310	320	400	410.0	420	660	880	900	1060	1200	1240
2.5	300	325	350	388	400	500	512.5	525	825	1100	1125	1325	1500	1550
3.0	360	390	420	465	480	600	615.0	630	990	1320	1350	1590	1800	1860
3.5	420	455	490	543	560	700	717.5	735	1155	1540	1575	1855	2100	2170
4.0	480	520	560	620	640	800	820.0	840	1320	1760	1800	2120	2400	2480

[1]From Nelson, P.V. 1998. Greenhouse Operations and Management, 5th ed. Published by Prentice Hall, Inc. Reprinted with permission.

Table 14. Conversion factors among electrical conductivity (EC) units[1]		
From	**To**	**Multiply by:**
mmhos/cm or mS/cm or dS/cm	mhos x 10^{-5}/cm	100
mhos x 10^{-5}/cm	mmhos/cm or mS/cm or dS/cm	0.01
mmhos/cm or mS/cm or dS/cm	μmhos or mhos x 10^{-6}	1000
μmhos or mhos x 10^{-6}	mmhos/cm or mS/cm or dS/cm	0.001
mmhos/cm or mS/cm or dS/cm	ppm	670[2]
ppm	mmhos/cm or mS/cm or dS/cm	0.0014925[2]
mhos x 10^{-5}/cm	ppm	6.70[2]
ppm	mhos x 10^{-5}/cm	0.14925[2]
μmhos or mhos x 10^{-6}	ppm	0.670[2]
ppm	μmhos or mhos x 10^{-6}	1.4925[2]

[1] Adapted from T.J. Cavins, et al., 2000.
[2] Some labs report EC in terms of ppm or cnvert EC to ppm. Although 670 is the basis used in this example, the conversion factor can vary between 640 and 700. This conversion factor is an average due to the variability in the type of fertilizer salts that contribute to the substrate EC in each sample, and it should be considered a broad approximation. Expressing EC in terms of mS/cm or mhos/cm is the preferred method.

Table 15 is designed to help growers decide which acid to add and in what quantities to acidify their irrigation water.

Table 15. Various acids to add to irrigation water for acidification[1]

Note: The table is an example from software called *Alkalinity Calculator,* available at www.ces.ncsu.edu/depts/hort/floriculture/software/alk.html It is an acidification analysis done on a water sample with a starting pH of 8.0 and alkalinity of 200 ppm $CaCO_3$ acidified to an end point pH of 5.8. For your specific water sample, download the *Alkalinity Calculator* and follow the directions listed on the website. You will need to obtain a water report on your irrigation water **prior to** running the software. You will need to know the water pH and alkalinity of your sample and have an idea about what end-point pH you want to obtain after acidification. The software also gives you information about the cost of the acidification treatment.

Alternative Acids to Add to Irrigation Water

Acids: / **Amounts**	**Phosphoric Acid (75%)**	**Phosphoric Acid (85%)**	**Sulfuric Acid (35%)**	**Sulfuric Acid (93%)**	**Nitric Acid (61.4%)**	**Nitric Acid (67%)**
For Small Volumes						
ml per liter	0.253	0.207	0.348	0.087	0.234	0.209
fl oz per gallon	0.032	0.027	0.044	0.011	0.030	0.027
ml per gallon	0.956	0.785	1.316	0.330	0.884	0.793
For a 1:100 Injector						
fl oz per gallon (conc.)	3.23	2.65	4.45	1.12	2.99	2.68
ml per gallon (conc.)	95.63	78.47	131.59	32.98	88.40	79.28
For a 1:128 Injector						
fl oz per gallon (conc.)	4.14	3.40	5.70	1.43	3.83	3.43
ml per gallon (conc.)	122.41	100.44	168.44	42.22	113.16	101.48
For a 1:200 Injector						
fl oz per gallon (conc.)	6.47	5.31	8.90	2.23	5.98	5.36
ml per gallon (conc.)	191.27	156.94	263.19	65.97	176.81	158.56

Nutrients Added by Each Type of Acid

Nutrients Added:	Phosphorus	Phosphorus	Sulfur	Sulfur	Nitrogen	Nitrogen
Amount Added (ppm):	94.6	94.6	50.3	50.3	43.7	43.7

Use the information above for modifying your fertility program.

Tables 16 through 20 help determine which fertilizers to use based on chemical analysis, reaction in substrate, longevity in substrate (slow release fertilizers), and incorporation rates for some popular slow release fertilizers. Tables 17 and 18 are specifically designed to provide detailed information on fertilizer calculations, which also aid determine correct application rates.

Table 16. Amounts of nutrient sources to combine in making various fertilizer formulas[1]

		Nutrient Sources[2]										
Fertilizer Name	**Analysis**	**33-0-0**	**13-0-44**	**15.5-0-0**	**16-0-0**	**21-0-0**	**45-0-0**	**0-0-60**	**12-62-0**	**21-53-0**	**% Nitrate**	**Reaction**
Ammonium nitrate	33-0-0	X									50	A
Potassium nitrate	13-0-44		X								0	N
Calcium nitrate	15.5-0-0			X							6	B
Sodium nitrate	16-0-0				X						0	B
Ammonium sulfate	21-0-0					X					100	A
Urea	45-0-0						X				100	SA
Potassium chloride	0-0-60							X			-	N
Monoammonium phosphate	12-62-0								X		100	A
Diammonium phosphate[3]	21-53-0									X	100	SA
Magnesium nitrate	10-0-0										0	B
Chrysanthemum green	18-0-22	1	2			1					47	A
General Summer	20-10-24	1					1	2		1	83	A
General low phosphate	21-4-20	7						4		1	55	A
General summer	21-17-20	1					2	3		3	90	A
General	17-6-27	4						4		1	57	A
UConn Mix	19-5-24		6	2			2		1		49	N
Editor's favorite	20-5-30		13				4			2	57	SA
20-20-20 substitute	20-20-22		4				1			3	67	SA
Starter and pink hydrangea	12-41-15		1						2		65	SA
Starter and pink hydrangea	17-35-16						1	4		10	100	SA
N-K only	16-0-24	2			1			2			40	SA
N-K only	20-0-30	1	2								28	SA
Blue hydrangea	13-0-22					2		1			100	VA
Blue hydrangea	15-0-15					3		1			100	VA
Acid	21-9-9	3	1			7		1		2	79	VA
Spring carnation	10-0-17				5			2			0	B
Winter nitrate	15-0-15		1	2							5	B
Winter potash	15-0-22		1	1							4	B
Lily substitute	16-4-12	1	4	6						1	22	N
High K	15-10-30		7	1						2	28	N

1 From Nelson, P.V. 1998. Greenhouse Operations and Management, 5th ed. Published by Prentice Hall, Inc. Reprinted with permission.
2 For names of nutrient sources, see the first nine entries in the Name column.
3 Diammonium phosphate may be pelletized and coated. To dissolve, use very hot water and stir vigorously. Sediment formation should not cause concern. Use crystalline potassium chloride if possible.
4 B = basic; N = neutral; SA = slightly acid; A = acid; VA = very acid.

NOTE: For example, an 18-0-22 formula fertilizer can be formulated by blending together 1 lb of ammonium nitrate plus 2 lbs of potassium nitrate plus 1 lb of ammonium sulfate. This formulation is determined by locating the 18-0-22 formula in the Analysis column. Then the three numbers 1, 2 and 1 are located in the row after this formula. Each of the three numbers is traced to the X above it and then to the nutrient source to the left of the X.

Table 17. Formulas for additional fertilizer calculations		
Compound	**Formula**	**Formula Weight**
Ammonium Nitrate	NH_4NO_3	80.8
Ammonium Sulfate	$(NH_4)_2SO_4$	132.0
Calcium Nitrate	$Ca(NO_3)_2$	164.0
Potassium Nitrate	KNO_3	101.1
Potassium Chloride	KCl	74.6
Potassium Sulfate	K_2SO_4	174.2
Urea	$CO(NH_2)_2$	60.0
Element	**Symbol**	**Atomic Weight**
Calcium	Ca	40.1
Carbon	C	12.0
Chlorine	Cl	35.5
Hydrogen	H	1.0
Nitrogen	N	14.0
Oxygen	O	16.0
Phosphorus	P	31.0
Potassium	K	39.1

Using Chemicals

1) mg of fertilizer source/liter of water = $\frac{\text{(ppm)(formula weight)}}{\text{(atomic weight of element)(number of units in formula of fertilizer source)}}$

2) ppm = $\frac{\text{(mg of fertilizer/liter of water)(atomic weight of element)(number of units of element in formula of fertilizer source)}}{\text{(formula weight of fertilizer source)}}$

3) to convert mg/l to lbs/100 gal, multiply mg by 0.0008344

4) to convert lbs/100 gal to mg/l, divide lbs by 0.0008344

EXAMPLE: How many pounds of potassium sulfate (K_2SO_4) need to be dissolved in 100 gallons of water to make 100 ppm K solution.

Get the formula weight of potassium sulfate (K_2SO_4) and the atomic weight of potassium from Table 14 (page 15).

Then:

1) mg of K_2SO_4 / liter of water = (100 x 174.2) ÷ (39.1 x 2) = 222.8 mg/L

2) 222.8 mg/L x 0.00083440 = 0.186 lbs potassium sulfate/100 gal

Using Premixed Fertilizers

1) mg of mixed fertilizer/liter of water $= \frac{\text{(ppm of N desired) (100)}}{\text{(\% N in fertilizer)}}$

2) ppm of P $= \frac{\text{(mg of mixed fertilizer/liter of water) (\% } P_2O_5\text{) (0.4366)}}{100}$

3) ppm of K $= \frac{\text{(mg of mixed fertilizer/liter of water) (\% } K_2O\text{) (0.8301)}}{100}$

4) mg of mixed fertilizer/liter of water $= \frac{\text{(ppm of P desired) (100)}}{\text{(\% } P_2O_5\text{) (0.4366)}}$

5) mg of mixed fertilizer/liter of water $= \frac{\text{(ppm of K desired) (100)}}{\text{(\% } K_2O\text{) (0.8301)}}$

6) mg of mixed fertilizer/liter of water $= \frac{\text{(mg of mixed fertilizer/liter of water) (\% N)}}{10}$

Table 18. Miscellaneous conversions used in fertilizer calculations

1 millimeter or cubic centimeter of water weighs 1 gram
1 liter of water weighs 1 kilogram
1 gallon of water weighs 8.34 pounds

1 part per million (ppm)	= 0.0001 percent
1 part per million	= 1 milligram/liter
1 part per million	= 0.013 ounces in 100 gallons of water
1 percent	= 10,000 ppm
1 percent	= 10 grams per liter
1 percent	= 10,000 grams per kilogram
1 percent	= 1.33 ounces by weight per gallon of water
1 percent	= 8.34 pounds per 100 gallons of water

0.1 percent	= 1000 ppm	= 1000 milligrams per liter
0.01 percent	= 100 ppm	= 100 milligrams per liter
0.001 percent	= 100 ppm	= 10 milligrams per liter
0.0001 percent	= 100 ppm	= 1 milligram per liter

Approximate weight-volume measurements for making small volumes of water soluble fertilizers

1 cup	= 8 oz or ½ lbs of fertilizer	1 tablespoon	= 0.5 oz of fertilizer
2 cups	= 1 lb of fertilizer	2 tablespoons	= 1 oz of fertilizer

Useful conversions

1 ton/acre	= 20.8 grams/square foot	100 lbs/acre	= 0.2296 lbs/100 square feet
1 ton/acre	= 1 lb/21.78 square feet	grams/square foot x 96	= lbs/acre
1 gram/square foot	= 96 lbs/acre	lbs/square foot x 43,560	= lbs/acre
1 lb/acre	= 0.0104 g/square foot	100 square feet	= 1/435.6 or 0.002296 acres
100 lbs/acre	= 0.2296 lbs/100 square feet		

Weight conversions from lbs/acre to weight/100 square feet

lbs/acre	amount applied/100 square feet	lbs/acre	amount applied/100 square feet
100	3.7 oz	700	1 lb 10 oz
200	7.4 oz	800	1 lb 13 oz
300	11.1 oz	900	2 lb 1 oz
400	14.8 oz	1000	2 lb 5 oz
500	1 lb 2½ oz	2000	4 lb 10 oz
600	1 lb 6 oz		

Percent to Ratio Conversion

2.0% = 1:50	0.6% = 1:167
1.5% = 1:67	0.5% = 1:200
1.0% = 1:100	0.4% = 1:250
0.9% = 1:111	0.3% = 1:333
0.8% = 1:128	0.2% = 1:500
0.7% = 1:143	

Table 19. Osmocote® controlled-release fertilizers and their release periods[1]		
Analysis	**Longevity[2] (months)**	**Product Name**
14-14-14	3-4	Osmocote®[3]
19-6-12	3-4	Osmocote®[3]
13-13-13	8-9	Osmocote® [3]
18-6-12	8-9	Osmocote®[3] Fast Start
18-6-12	8-9	Osmocote®[3]
17-7-12	12-14	Osmocote®[3]
15-9-12	3-4	Osmocote® Plus
15-9-12	5-6	Osmocote® Plus
15-9-12	8-9	Osmocote® Plus
15-9-12	12-14	Osmocote® Plus
15-9-12	14-16	Osmocote® Plus
16-8-12	8-9	Osmocote® Plus Minors Tablets
19-5-8 + Minors	8-9	Osmocote® Pro with Poly-S
19-5-9 + Minors	12-14	Osmocote® Pro with Poly-S
20-5-8 + Minors	8-9	Osmocote® Pro with Poly-S
24-4-8	8-9	Osmocote® Pro with Resin Coated Urea
24-4-7	12-14	Osmocote® Pro with Resin Coated Urea
24-4-6	14-16	Osmocote® Pro with Resin Coated Urea
21-4-7w/Mg & Fe	8-9	Osmocote® Pro with Resin Coated Urea
21-3-7w/Mg & Fe	12-14	Osmocote® Pro with Resin Coated Urea
22-4-9 + Minors	5-6	Osmocote® Pro with Resin Coated Urea
22-4-8 + Minors	8-9	Osmocote® Pro with Resin Coated Urea
22-4-7 + Minors	12-14	Osmocote® Pro with Resin Coated Urea
22-4-6 + Minors	14-16	Osmocote® Pro with Resin Coated Urea
20-4-9	8-9	Osmocote® Pro with Methylene Urea and Ureaform
20-4-8	12-14	Osmocote® Pro with Methylene Urea and Ureaform
23-4-8 + Minors	14-16	Osmocote® Pro + ScottKote™
19-7-10 + Fe	3-4	Osmocote® Pro with Uncoated NPK and Iron
18-7-10 + Fe	8-9	Osmocote® Pro with Uncoated NPK and Iron
17-7-10 + Fe	12-14	Osmocote® Pro with Uncoated NPK and Iron
13-10-13	5-6	Osmocote® Pro with IBDU and Minors
15-10-10	8-9	Osmocote® Pro with IBDU and Minors
18-8-8	8-9	Osmocote® Pro with IBDU and Minors
20-4-8	8-9	Osmocote® Pro with IBDU and Minors
18-5-9	12-14	Osmocote® Pro with IBDU and Minors
17-6-12 + Minors	3-4	Sierra® Tablets
17-6-10 + Minors	8-9	Sierra® Tablets

[1] From the Scotts Company and Subsidiaries, Marysville, OH 43041.
[2] At an average root substrate temperature of 70 degrees F (21 degrees C).
[3] Six trace elements plus magnesium.

Table 20. Rates in lb/yd^3 (kg/m^3) for incorporation of three of the most popular formulations of Nutricote into greenhouse root substrates						
Release Type (days[3])	**Sensitive Crops**		**Medium-Feeding Crops**		**Heavy-Feeding Crops**	
			13-13-13			
70	2.5	(1.5)	5	(3.0)	8.5	(5.1)
100	3.5	(2.1)				
140	5	(3.0)	9	(5.4)	13	(7.8)
180	6	(3.6)	11	(6.6)	17	(10.2)
270	8	(4.8)	13	(7.8)	21	(12.6)
360	11	(6.6)	15	(9.0)	25	(15.0)
			14-14-14			
40	2	(1.2)	5	(3.0)	8	(4.7)
70	4	(2.4)	9	(5.4)	14	(8.3)
100	5	(3.0)	12	(7.1)	20	(11.9)
140	8	(4.7)	15	(9.0)	22	(13.0)
180	12	(7.1)	20	(11.9)	28	(16.6)
270	16	(9.5)	24	(14.2)	32	(19.0)
360	20	(11.9)	28	(16.6)	36	(21.3)
			18-6-8			
70	2	(1.2)	4.5	(2.7)	7.5	(4.5)
100	3	(1.8)	6.5	(3.9)	11	(6.6)
140	4.5	(2.7)	8	(4.8)	12	(7.2)
180	6	(3.6)	11	(6.6)	14	(8.4)
270	8	(4.8)	13	(7.8)	16	(12.0)
360	11	(6.6)	15	(9.0)	18	(13.8)

[1] From Nelson, P.V. 1998. Greenhouse Operations and Management, 5th ed. Published by Prentice Hall, Inc. Reprinted with permission.

Tables 21 through 22 are designed to assist growers in correcting the pH of the growing substrate.

Table 21. Materials and rates necessary to lower the pH level of greenhouse potting substrate 0.5 to 1.0 units [1]			
Material	**Pounds to incorporate in lbs/yd^3**	**Pounds to dissolve in 100 gal of water[2]**	**Rate of change in pH**
Aluminum sulfate	1.5	6.0	Rapid
Iron sulfate	1.5	6.0	Moderate
Finely-ground elemental sulfur	0.75	-	Slow

[1] Adapted from Bailey, D.A. 1996.
[2] Apply this drench as a normal watering, about 1 quart per square foot or 8 fluid ounces per 6-inch pot.

Table 22. Approximate amount of materials required to change pH of peat-based potting mixes[1]		
Pounds per cubic yard to change acidity to pH 5.7 for:		
Beginning pH	**50% Peat 50% Bark**	**100% Peat**
7.5[2]	2.0	3.4
7.0	1.5	2.5
6.5	1.0	2.0
5.0[3]	***2.5***	***3.5***
4.5	***5.6***	***7.4***
4.0	***7.9***	***11.5****
3.5	***10.5****	***15.58***

[1] Adapted from Conover, C.A., and R.T. Poole. 1984.
[2] Add sulfur or acidifying mixture to lower pH to 5.7.
[3] Add dolomitic lime or equivalent amount of calcium to raise pH to 5.7.
* Addition of more than 10 pounds of dolomitic per yd^3 can cause micro-nutrient deficiencies.

Table 23 will help when applying various plant growth regulators.

Table 23. Dilution/conversion chart for various plant growth regulators[1]						
A-REST (0.0264% active ingredient)						
Spray	**Spray Solution (ppm)**	**Fluid Ounces per Gallon of Final Solution**		**Milliliters per Gallon of Final Solution**		**Milliliters per Liter of Final Solution**
	1	48		14.34		3.79
	3	1.45		43.02		11.36
	10	4.85		143.39		37.88
	25	12.12		358.47		94.70
	50	24.24		716.93		189.39
	75	36.36		1075.40		284.09
	100	48.48		1433.87		378.79
Drench	**Dose (Milligrams per 6-in Pot)**	**Drench Volume per 6-in Pot* (Fluid Ounces)**	**ppm solution**	**Fluid Ounces per Gallon of Final Solution**	**Milliliters per Gallon of Final Solution**	**Milliliters per Liter of Final Solution**
	0.125	4	1.06	0.51	15.15	4.0
	0.25	4	2.11	1.02	30.30	8.01
	0.50	4	4.23	2.05	60.61	16.01
	0.75	4	6.34	3.07	90.91	24.02
	1.00	4	8.45	4.10	121.21	32.02
* 2 fl oz/4-in pot; 3 fl oz/5-in pot; 10 fl oz/8-in pot						

Table 23. ***(Continued)***

CYCOCEL (11.8% active ingredient)

Spray	Spray Solution (ppm)	Fluid Ounces per Gallon of Final Solution	Milliliters per Gallon of Final Solution	Milliliters per Liter of Final Solution
	1,000	1.08	32.08	8.47
	1,500*	1.63	48.12	12.71
	2,000	2.17	64.16	16.95
	2,500	2.71	80.20	21.19
	3,000**	3.25	96.24	25.42
	5,000	5.42	160.40	42.37

* Commonly referred to as 1:80. ** Commonly referred to as 1:40.

Drench	Dose (Milligrams per 6-in Pot)	Drench Volume per 6-in Pot* (Fluid Ounces)	ppm	Fluid Ounces per Gallon of Final Solution	Milliliters per Gallon of Final Solution	Milliliters per Liter of Final Solution
	355	6	2,000	2.17	64.18	16.95
	532	6	3,000**	3.25	96.18	25.42
	710	6	4,000	4.34	128.36	33.90

* 2 fl oz/2¼- to 3-in pot; 3 fl oz/4-in pot; 4 fl oz/5-in pot; 8 fl oz/8-in pot.
** Commonly referred to as 1:40.

B-NINE WSG (85% active ingredient)

Spray	Spray Solution (ppm)	Ounces per Gallon of Final Solution	Grams per Gallon of Final Solution	Grams per Liter of Final Solution
	1,000	0.16	4.45	1.18
	2,500	0.39	11.13	2.94
	5,000	0.79	22.26	5.88
	7,500	1.18	33.40	8.82

BONZI (0.4% active ingredient)

Spray	Spray Solution (ppm)	Fluid Ounces per Gallon of Final Solution	Milliliters per Gallon of Final Solution	Milliliters per Liter of Final Solution
	1	0.032	0.95	0.25
	3	0.096	2.84	0.75
	5	0.160	4.73	1.25
	10	0.320	9.46	2.50
	15	0.480	14.20	3.75
	25	0.800	23.66	6.25
	45	1.440	42.59	11.25
	60	1.920	56.78	15.00
	90	2.880	85.17	22.50

Table 23. ***(Continued)***

BONZI ***(cont.)***

Drench	Dose (Milligrams per 6-in Pot)	Drench Volume per 6-in Pot* (Fluid Ounces)	ppm	Fluid Ounces per Gallon of Final Solution	Milliliters per Gallon of Final Solution	Milliliters per Liter of Final Solution
	0.1	4	0.85	0.03	0.8	0.21
	0.2	4	1.69	0.05	1.6	0.42
	0.5	4	4.23	0.14	4.0	1.06
	1.0	4	8.45	0.27	8.0	2.11
	1.9	4	16.06	0.51	15.2	4.02

* 2 fl oz/4-in pot; 3 fl oz/5-in pot; 10 fl oz/8-in pot.

SUMAGIC (0.055% active ingredient)

Spray	Spray Solution (ppm)	Fluid Ounces per Gallon of Final Solution	Milliliters per Gallon of Final Solution	Milliliters per Liter of Final Solution
	1	0.26	7.57	2
	3	0.77	22.71	6
	5	1.28	37.85	10
	10	2.56	75.71	20
	15	3.84	113.56	30
	25	6.40	189.27	50
	30	7.68	227.12	60
	50	12.80	378.54	100

Drench	Dose (Milligrams per 6-in Pot)	Drench Volume per 6-in Pot* (Fluid Ounces)	ppm	Fluid Ounces per Gallon of Final Solution	Milliliters per Gallon of Final Solution	Milliliters per Liter of Final Solution
	0.02	4	0.17	0.04	1.28	0.34
	0.03	4	0.25	0.06	1.92	0.51
	0.04	4	0.34	0.09	2.56	0.68
	0.05	4	0.42	0.11	3.20	0.85
	0.06	4	0.51	0.13	3.84	1.01
	0.09	4	0.76	0.19	5.76	1.52
	0.12	4	1.01	0.26	7.68	2.03
	0.20	4	1.69	0.43	12.80	3.38

* 2 fl oz/4-in pot; 3 fl oz/5-in pot; 10 fl oz/8-in pot.

Table 23. ***(Cont.)***

Spray	Spray Solution (ppm)	Fluid Ounces per Gallon of Final Solution	Milliliters per Gallon of Final Solution	Milliliters per Liter of Final Solution
FLOREL (3.9% active ingredient)				
	300	0.97	28.72	7.59
	325	1.05	331.11	8.22
	500	1.62	47.86	12.64
	750	2.43	28.89	18.97
	975	3.16	93.34	24.66
	1,000	3.24	95.73	25.29
PRO-GIBB (4% active ingredient)				
	2.5	0.008	0.24	0.06
	5.0	0.016	0.47	0.13
	100.0	0.320	9.46	2.50
	250.0	0.800	23.66	6.25
	300.0	0.960	28.39	7.50
	500.0	1.600	47.31	12.50
FASCINATION				
	1/1	0.007	0.2	0.06
	5/5	0.04	1.1	0.3
	10/10	0.07	2.1	0.6
	25/25	0.18	5.3	1.4
	50/50	0.36	10.5	2.8
	75/75	0.53	15.8	4.2
	100/100	0.71	21.0	5.5

[1] Adapted from Hammer, P.A. 1992.

Tables 24 through 25 are designed to assist growers who desire to prepare their own substrate mix.

Table 24. Pre-plant fertilizer sources and rates of application [1,2]

	Rate per cubic yard (per m^3)	
Nutrient source	**Soil-based media**	**Soilless media**
To provide calcium and magnesium		
When a pH rise is desired:		
Dolomitic limestone	0-10 lbs (0.6 kg)	10 lbs (6 kg)
When no pH shift is desired:		
Gypsum for calcium	0-5 lbs (0.3 kg)	0-5 lbs (0.3 kg)
Epsom salt for magnesium	0-1 lbs (0-0.6 kg)	0-1 lb (0-0.6 kg)
To provide phosphorus[3]		
Superphosphate (0-45-0), or	1.5 lb (0.9 kg)	2.25 lbs (1.3 k.)
To provide sulfur		
Gypsum (calcium sulfate)	1.5 lbs (0.9 kg)	1.5 lbs (0.9 kg)
To provide micronutrients: iron, manganese, zinc, copper, boron, molybdenum		
Esmigran	3-6 lbs (1.8-3.6 kg)	3-6 lbs (1.8-3.6 kg)
Micromax	1-1.5 lbs (0.6-0.9 kg)	1-1.5 lb (0.6-0.9 kg)
Promax	1-1.5 lbs (0.6-0.9 kg)	1-1.5 lb (0.6-0.9 kg)
F-555HF	3 oz (112 g)	3 oz (112 g)
F-111HR	1 lb (0.6 kg)	1 lb (0.6 kg)
To provide nitrogen and potassium (optional)		
Calcium nitrate, or	1 lb (0.6 kg)	1 lb (0.6 kg)
Potassium nitrate	1 lb (0.6 kg)	1 lb (0.6 kg)

[1] From Nelson, P.V. 1998. *Greenhouse Operations and Management, 5th ed.* Published by Prentice Hall, Inc. Reprinted with permission.

[2] Rates in this table are for crops other than seedlings. Only limestone is necessary in seedling substrates. Optional nutrient sources for seedling substrate include up to 1 lb (0.6 kg) each of superphosphate, gypsum, and calcium nitrate; no potassium nitrate; and the low end of the rate range for micronutrients.

[3] These are maximum rates designed to supply phosphorus for three to four months if pH is maintained in a desirable range for the crop and the leaching percentage is at or below 20 percent.

Table 25. Cornell Peat-Lite Mix A for seedlings, bedding plants and potted plants*

Materials Used	Amount per Cubic Yard[1]	Amount per Bushel
Spagnum peat moss	0.5 cubic yard (13 bushels)	0.5 bushel
Horticultural grade vermiculite #2 size for seed germination #2 or 3 for transplanting	0.5 cubic yard (13 bushels)	0.5 bushel
Superphosphate	1 to 2 pounds	20.5 to 41.0 grams (1 to 2 tablespoons)
or Treble superphosphate[2]	0.5 to 1 pound	10.3 to 20.5 grams (0.6 to 1.2 tablespoons)
Ground dolomitic limestone[2]	5 to 10 pounds	103 to 206 grams (5.2 to 10.4 tablespoons)
Gypsum[2]	2.0 pounds	41 grams (2.5 tablespoons)
Calcium nitrate	0.5 pound	10 grams (1.2 tablespoons)
Potassium nitrate	0.5 pound	10 grams (1.2 tablespoons)
Trace element material (Use Only One)		
Esmigran, or	4.0 pounds	81 grams (4.0 tablespoons)
Micromax	1.5 pounds	31 grams (1.7 tablespoons)
Wetting agent (Use Only One[3])		
Aqua-Gro 2000 granular or	1.0 pound	----
Aqua-Gro 2000-L liquid[4]	3-5 fluid ounces	0.5 level teaspoon
PsiMatric liquid[5]	2-4 fluid ounces	0.5 level teaspoon

[1] A cubic yard equals 27 cubic feet or approximately 22 bushels. A 15 to 20 percent shrink occurs in mixing. Therefore, an additional 5 cubic feet or 4 bushels are used to obtain a full cubic yard.

[2] If treble superphosphate is used, gypsum is added to supply sulphur. If only 5 pounds of limestone are used for pH control, then add the gypsum that supplied calcium and sulphur.

[3] The granular Aqua-Grow is preferred.

[4] 3 ounces/yard for germination/seedlings, 5 ounces/yard for bedding plants and pot plants.

[5] 2 ounces/yard for germination/seedlings, 4 ounces/yard for bedding plants and pot plants.

* Adapted from Fonteno. W.C. 1994

Table 26. Number of pots and flats that can be filled from 1 ft³ of soil mix

Pot Size (in)	Approximate Dimension Top x Depth x Bottom (in)	Number of Pots/ft³
Standard Round Pots		
2¼	2¼ x 2 1/16 x 1¾	256
2½	2⅜ x 2¼ x 2	208
3	3 x 2 13/16 x 2¼	120
3½	3⅜ x 3 3/10 x 2⅜	80
4	4 x 3⅞ x 2¾	48
4½	4⅜ x 4⅜ x 3	40
5	5 x 3½ x 4	28
5½	5½ x 5⅜ x 3 13/16	20
6	6 x 5¾ x 4 1/16	16
7	6¾ x 7¾ x 4 11/16	10
8	7⅝ x 7¾ x 5⅜	6
10	9⅞ x 9¾ x 6⅞	3
Azalea Pots		
4	4 x 21 3/16 x 3	56
4½	4½ x 3⅜ x 3¼	44
5	5 x 3 13/16 x 3 9/16	28
5½	5½ x 4¼ x 3⅞	24
6	6 x 4⅝ x 4¼	18
6½	6½ x 5 x 4 9/16	16
76	⅞ x 5⅜ x 5 1/16	12
7½	7⅜ x 5 11/16 x 5⅜	10
8	8⅛ x 5⅞ x 6	7
8½	8⅛ x 6¼ x 6¼	6
10	9⅞ x 7⅜ x 7¼	4
Square Pots		
2¼	15/16 x 1⅞ x 1½	357
2½	2⅜ x 1 15/16 x 1⅞	224
3	2¾ x 2¼ x 2⅛	
3½	3¼ x 2¾ x 2½	
4	3⅝ x 3⅛ x 2⅞	
4½	4⅛ x 3⅝ x 3¼	
Bulb Pans		
6	6 1/16 x 3 9/16 x 4 9/16	24
7	7 1/16 x 3 13/16 x 5 9/16	16
10	10¼ x 4 15/16 x 8⅛	5
12	12⅛ x 6 x 9¾	3

Type	Approximate Dimension Top x Depth x Bottom (in)	Units/ft³
Flats		
Germination tray	11½ x 21¼ x 1⅛	7.0
20-row Seeding tray	11½ x 21¼ x 1⅛	11.0
Standard Cell-Packs		
8-4 cell packs per tray		5.4
8-6 cell packs per tray		5.9
10-4 cell packs per tray		6.2
10-6 cell packs per tray		6.7
12-4 cell packs per tray		6.0
12-6 cell packs per tray		7.0
Standard size 11¼ x 21¼ x 2½		
Plug Flats		
50 sq. flat	1⅞ x 2¼	6.3
72 rd. flat	1 7/16 x 1¾	12.8
72 sq. flat	1 9/16 x 2 3/16	7.3
98 sq. flat	1 5/16 x 2	7.9
128 sq. flat	1 3/16 x 1 13/16	9.0
162 sq. flat	1 x 1½	9.2
200 sq. flat	5/16 x 1½	10.7
273 sq. flat	¾ x 1⅛	18.6
288 rd. flat	13/16 x 1	19.1
288 sq. flat	13/16 x 1¼	15.0
392 sq. flat	⅝ x ⅞	23.1
406 sq. flat	⅝ x ⅞	22.2
512 sq. flat	9/16 x ¾	24.7
Nursery Containers (plastic)		
1 gal	6½ x 6½	10.0
2 gal	8½ x 8½	4.5
3 gal	10¼ x 9⅝	3.3
Saucerless		
8		9.7
0		5.3
2		3.1
Hanging Baskets		
6	6 x 4½ 3¼	29
8	7 ½ x 4⅞ x 4 1/16	11
10	10 x 6⅛ x 4	5

Table 26. ***(Continued)***

Geranium Pots		
3½	3¼ x 3 x 2⅜	96
4	$3^{15}/_{16}$ x $3^{7}/_{16}$ x 2⅞	56
4¼	4¼ x $3^{9}/_{16}$ x 3⅛	50
4½	4⅜ x 3⅞ x 3	44

NOTES: Sources – Eason Horticultural Resources, Inc., Crestview Hills, KY, and Hummert's Helpful Hints, 1999-2000 edition.
These figures have to be treated as approximations. Actual pot dimensions will vary from one manufacturer to another. Based on volume of pots when filled level to rim with loose, unpacked soil mix.

Table 27. Number of nursery containers that can be filled from 1 yd^3 of soil mix[1]

Size	# / per yd^3
Trade 1	300
Full 1	200
2	140
3	80
5	50
7	35
10	20
15	14
25	8
45	4

[1] Source: Ruter, J. (pers. communication)

Soil Mix Volumes
1 bushel = 1 ¼ cu. ft.
1 cu. yard = 27 cu. ft.
1 cu. yard = 22 bushels
100 sq. ft. of bench area (at 6 in. soil depth) = 50 cu. ft. or 40 bushels of soil mix.

Table 28. Coverage estimates for perlite, peat, topsoil and straw

Thickness	4 cu ft Perlite	6 cu ft Canadian Peat (compressed) (12 cu ft loose)	1 cu yd* Peat Mulches, Topsoil, etc.	1 Bale Pinestraw	1 Bale Wheatstraw
2 in	28 sq ft	72 sq ft	162 sq ft	90 sq ft	180 sq ft
1 in	48 sq ft	144 sq ft	324 sq ft	180 sq ft	360 sq ft
½ in	96 sq ft	288 sq ft	648 sq ft	360 sq ft	720 sq ft
¼ in	192 sq ft	576 sq ft	1296 sq ft	720 sq ft	1440 sq ft

* 1 cubic yard (yd^3) = 27 cubic feet (ft^3)

Tables 29 through 30 help determine correct spacing and number of plants at each spacing for both greenhouse and field situations.

Table 29. Plant spacing guide (greenhouse)

Spacing	Plants/sq ft	Plants/A of production area	Plants/A of ground covered*
8" x 9"	2.0	87,000	58,000
8" x 8"	2.3	98,000	65,000
8" x 7"	2.6	114,000	76,000
8" x 6"	3.0	30,000	87,000
6" x 7"	3.4	147,000	98,000
6" x 6"	4.0	174,000	116,000
6" x 5"	4.8	208,000	139,000
5" x 5"	5.8	252,000	168,000
5" x 4"	7.2	313,000	209,000
5" x 3"	9.6	418,000	279,000
4" x 3"	12.0	522,000	348,000

* Assuming 1/3 of production area devoted to aisles, etc.

Table 30. Plant spacing guide (field/orchard) [1]

	Spacing Between Plants Within the Row										
Feet	**6**	**8**	**10**	**12**	**14**	**16**	**18**	**20**	**22**	**24**	**26**
4	1815	1361	1089	907	777	680	605	544	495	453	418
6	1218	907	726	605	518	453	403	363	330	302	279
8	907	680	544	453	388	339	302	272	247	226	209
10	726	544	435	362	311	272	242	218	207	181	167
12	605	453	362	302	259	226	201	181	165	151	139
14	518	388	311	259	222	194	172	155	141	129	119
16	453	339	272	226	194	169	151	136	123	113	104
18	403	302	242	201	172	151	134	121	110	100	93
20	363	272	218	181	155	136	121	108	99	90	83
22	330	247	207	165	141	123	110	99	90	82	76
24	302	226	181	151	129	113	100	90	82	75	69
26	279	209	167	139	119	104	93	83	76	69	64

Spacing Between Rows of Plants

Number of Plants per Acre

[1] To determine the number of plants per acre for spacing not given in the table, multiply the distance in the row by the distance between rows and divide that number into 43,560.

Landscape

Tables 31 through 36 are designed to aid landscape professionals and homeowners in determining number of plants at various spacing, cubic yards of soil needed at various depths and areas, areas covered in square feet at various depths, time needed to trim lawns, and the volume of water delivered as affected by the size of irrigation hose.

Table 31. Estimated number of plants to fill 100 ft^2 of bed area for square (row) and triangular (equilateral) planting patterns using 4- to 14-inch spacing distances[1]

Planting Pattern	Inches between rows of plants (Y)	Inches between plants (X) within rows	Estimated number of plants per 100 ft^2
Square			
For square spacing, the distance between plants within rows (x) equals the distance between rows (Y) 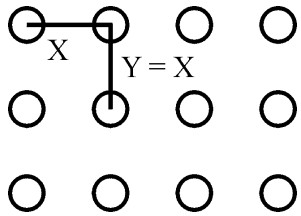	4	4	900
	6	6	400
	8	8	225
	10	10	144
	12	12	100
	14	14	74
Triangular			
For triangular spacing, the distance between plants within rows and between rows both equal X, and the distance between rows (Y) equals 0.886 X. 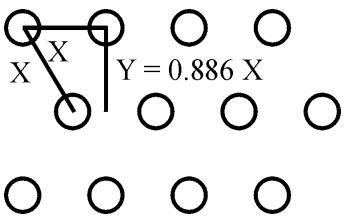	3.46	4	1039
	5.20	6	462
	6.93	8	260
	8.66	10	166
	10.39	12	115
	12.12	14	85

[1] Adopted from Bailey, D.A., and M.A. Powell. 1999.

Table 32. Volume of water delivered – by size of hose							
Water Pressure (lbs)	*(Gallons per Minute in Bold Face)* **Hose Diameter**						
	3/8"	**13/32"**	**7/16"**	**1/2"**	**9/16"**	**3/4"**	**5/8"**
30	2.6	3.2	3.8	5.3	7.2	9.3	14.5
40	3.5	4.2	5.0	7.0	9.4	12.2	19.0
50	4.3	5.2	6.3	8.8	11.8	15.3	24.0
60	5.2	6.2	7.5	10.5	14.1	18.3	28.5
70	6.0	7.3	8.7	12.2	16.2	21.0	32.7
80	6.8	8.3	9.9	13.9	18.5	24.0	37.3
NOTE: Table based on 50-foot hose length; for 25 feet, multiply by 1.40; for 75 feet, multiply by 0.80.							

Table 33. Number of plants per acre at various spacing					
Distance Apart	**No. of Plants**	**Distance Apart**	**No. of Plants**	**Distance Apart**	**No. of Plants**
3 x 3 inches	696,690	**4 x 4 feet**	2,722	**13 x 13 feet**	257
4 x 4 inches	392,040	**4½ x 4½ feet**	2,151	**14 x 14 feet**	222
6 x 6 inches	174,240	**5 x 1 feet**	8,712	**15 x 15 feet**	193
9 x 9 inches	77,440	**5 x 2 feet**	4,356	**16 x 16 feet**	170
1 x 1 foot	43,560	**5 x 3 feet**	2,904	**16½ x 16½ feet**	160
1½ x 1½ feet	19,360	**5 x 4 feet**	2,178	**17 x 17 feet**	150
2 x 1 feet	21,780	**5 x 5 feet**	1,742	**18 x 18 feet**	134
2 x 2 feet	10,890	**5½ x 5½ feet**	1,417	**19 x 19 feet**	120
2½ x 2½ feet	6,960	**6 x 6 feet**	1,210	**20 x 20 feet**	108
3 x 1 feet	14,620	**6½ x 6½ feet**	1,031	**25 x 25 feet**	69
3 x 2 feet	7,260	**7 x 7 feet**	881	**30 x 30 feet**	48
3 x 3 feet	4,840	**8 x 8 feet**	680	**33 x 33 feet**	40
3½ x 3½ feet	3,555	**9 x 9 feet**	537	**40 x 40 feet**	27
4 x 1 feet	10,890	**10 x 10 feet**	435	**50 x 50 feet**	17
4 x 2 feet	5,445	**11 x 11 feet**	360	**60 x 60 feet**	12
4 x 3 feet	3,630	**12 x 12 feet**	302	**66 x 66 feet**	10

Table 34. Times required to mow or trim lawn areas

In Minutes Per 1000 Square Feet - Or - Minutes Per Acre (Numbers Rounded Up To The Nearest Minute)

Speed Is		**And Width of Cut**Is**							
Miles Per Hour	Feet Per Minute	6"	12"	18"	24"	36"	48"	60"	72"
.25	22	91	46	31	23	16	12	10	8
.5	44	46	23	16	12	8	6	5	4
1.0	88	23	12	8	6	4	3	3	2
1.25	110	19	10	7	5	4	3	2	66
1.50	132	16	8	6	4	3	2	66	55
1.75	154	13	7	5	4	3	71	57	48
2.0	176	12	6	4	3	2	62	50	42
2.5	220	10	5	3	3	66	50	40	33
3.0	264	8	4	3	83	55	42	33	28
3.5	308	7	4	95	71	48	36	29	24
4.0	352	6	3	83	62	42	31	25	21
4.5	396	6	110	74	55	37	28	22	19
5.0	440	198	99	66	50	33	25	20	17
5.5	484	180	90	60	45	30	23	18	15
6.0	528	165	83	55	42	28	21	17	14
8.0	704	124	62	42	31	21	16	13	11

*Time=Min./1000 sq. ft. above this Line

*Time=Min./Acre below this Line

**These figures are for effective width of cut, that is, width of blade less operational overlap averages = 4" to 10"

Some Average Speeds

Slow Walk - Pushing Mower	150'/Min.
Slow Walk	200'/Min.
Fast Pushing Mower	250'/Min.
Modest Riding Yard Mower	275'/Min.
Fast Brisk Walk	300'/Min.
Good Riding Yard Mower	300'-350'/Min.
Tractor-Towed Riding Mower	6-7 M.P.H.

1 Acre = 43,560 sq ft; 1 mile = 5,280 lin ft

Table 35. Cubic yards of soil needed at various depths and areas

Depth in Inches	Areas in 1,000 Sq. Ft. and Acres														
	½	1	2	3	4	5	6	7	8	9	10	½A	1A	2A
1	2	3	6	9	12	15	17	22	25	28	31	67	134	269
2	3	6	12	19	25	31	37	43	49	56	62	134	269	538
3	5	9	19	28	37	46	56	65	74	83	93	202	403	807
4	6	12	25	37	49	62	74	86	99	111	124	269	538	1076
5	8	15	31	46	62	77	93	108	124	139	154	336	672	1344
6	9	19	37	56	74	93	111	130	148	167	185	403	807	1613
7	11	22	43	65	86	108	130	151	173	194	216	471	941	1882
8	12	25	49	71	99	124	148	173	198	222	247	538	1076	2151
9	14	28	56	83	111	139	167	194	222	250	278	605	1210	2420
10	15	31	62	93	124	154	185	216	247	278	309	672	1344	2688
11	17	34	68	102	136	170	203	238	272	306	340	739	1479	2858
12	19	37	74	111	148	185	222	259	296	333	370	807	1613	3227

Table 36. Areas covered in square feet at various depths

Depth in Cu. Yds.	Depth in Inches					
	1	2	3	4	5	6
1	324	162	108	81	65	54
2	648	324	216	162	130	108
3	972	486	324	243	195	162
4	1296	648	432	324	260	216
5	1620	810	540	405	324	270
6	1944	972	648	486	390	324
7	2268	1134	756	567	455	378
8	2592	1296	864	648	520	432

Table 37 deals with temperature conversion.

Table 37. Temperature conversion

Fahrenheit ⇨	Centigrade (Celsius)	Centigrade (Celsius) ⇨	Fahrenheit
0	-17.8	-30	-22.0
5	-15.0	-25	-13.0
10	-12.2	-20	-4.0
15	-9.4	-15	5.0
20	-6.7	-10	14.0
25	-3.9	-5	23.0
30	-1.1	0	32.0
35	1.7	5	41.0
40	4.4	10	50.0
45	7.2	15	59.0
50	10.0	20	68.0
55	12.8	25	77.0
60	15.6	30	86.0
65	18.3	35	95.0
70	21.1	40	104.4
75	23.9	45	113.0
80	26.7	50	122.0
85	29.4	55	131.0
90	32.2	60	140.0
95	35.0	80	176.0
100	37.8	100	212.0

NOTES: 1) To convert temperature in degrees from Centigrade (Celsius) to temperature in degrees Fahrenheit: Multiply Centigrade temperature by **1.8** and add **32**. 2) To convert temperature in degrees Fahrenheit to temperature in degrees Centigrade (Celsius): Subtract **32** and multiply by **0.55**.

Formulas for calculating greenhouse volumes
These formulas are helpful in determining heating and cooling costs for greenhouses.

Figure 1-A. Formula for calculating uneven-span greenhouse volume.

L = length
W = width
W_1 = width of short span
W_2 = width of long span
H_e = height from floor to eave
H_r = height from eave to top

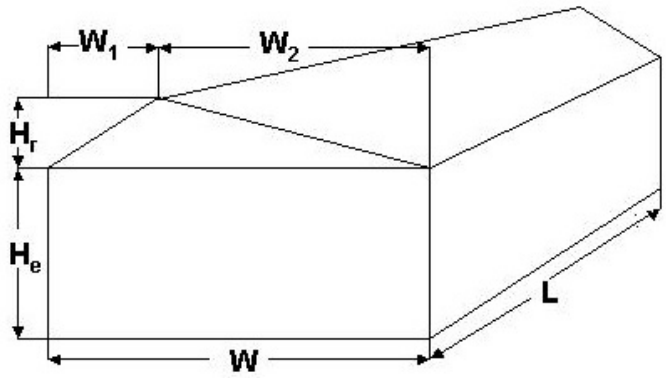

Greenhouse volume in cubic feet = $[(H_e \times W) + (W_1 \times H_r)/2 + (W_2 \times H_r)/2] \times L$

Figure 1-B. Formula for calculating even-span greenhouse volume.

L = length
W = width
H_e = height from floor to eave
H_r = height from eave to top

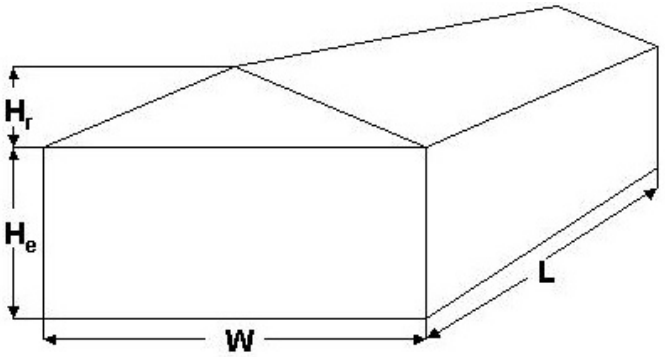

Greenhouse volume in cubic feet = $[(H_e \times W) + (W \times H_r)/2] \times L$

Figure 1-C. Formula for calculating quonset greenhouse volume.

L = length
W = width
H_e = height form floor to eave
H_r = height from eave to top

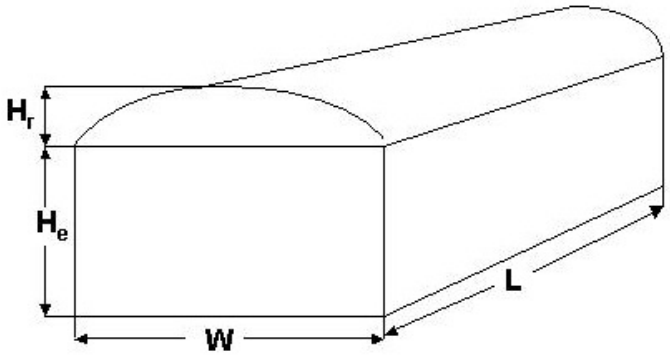

Formula for calculating the surface area of the gable end, which is an arc segment.

A = arc length of the roof
R = radius of circle of which a is the arc segment
α = the angle forming the arc segment

R = c
$c = b + H_r$
$a^2 + b^2 = c^2$
tan ***A*** = a/b

Examples: H_r = 4', W = 20'
R = c
C = b + 4'
a = 10'
$(10)^2 + b^2 = (b + 4)^2$
b = 10.5
c = 10.5 + 4 = 14.5' = R

A = $(\pi \times R \times \alpha)/180^\circ$
tan ***A*** = 10/10.5
tan ***A*** = 0.9524
arctan 0.9524 = 43.6°
$\alpha = 2 \times A = 2 \times 43.6^\circ = 87.2^\circ$

A = $(\pi \times R \times \alpha)/180^\circ$
A = $(3.14159 \times 14.5 \times 887.2)/180^\circ$
A = 22'6"

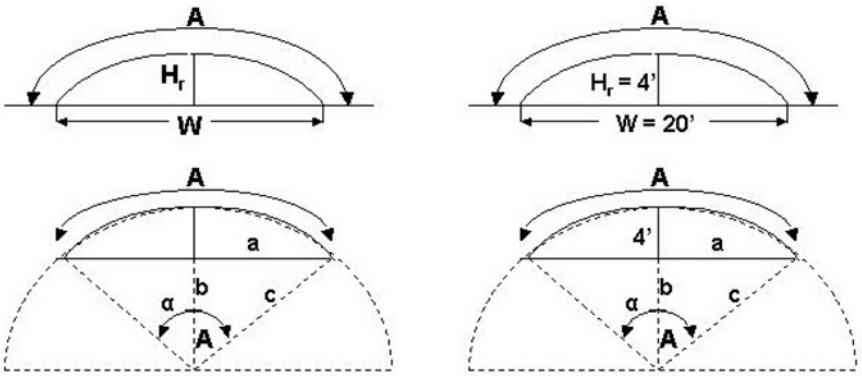

Area of an arc segment = (A x R)/2
Area = 22.6 x 14.5)/2 = 164 ft^2

But we do not need the area of the entire arc segment, only the area actually present on the greenhouse; so we need to SUBTRACT OFF the bottom triangles:

Area of a triangle = ½ (width x height) = a x b = 10 x 10.5 = 105 ft^2
So the area of one gable end = 164 ft^2 - 105 ft2 = 59 ft^2

Volume (above eaves) is area of gable multiplied by the length of the greenhouse. Greenhouse volume in cubic feet = (H_e x W x L) + (Volume above eaves).

Formulas for calculating variously-shaped areas
These formulas are helpful in determining application rates for areas with specific shapes. Knowledge of the areas is also helpful in estimating amounts of various soil amendments and number of plants needed.

Figure 2-A. Square or rectangle

Area = Length x Width
Area = L x W
Area = (50') x (50')
Area = 2,500 sq ft

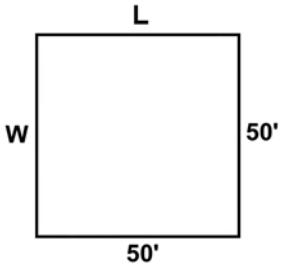

Figure 2-B. Triangle

Area = ½ x Base x Height
Area = ½ x B x H
Area = ½ x (50') x (75')
Area = 1,875 sq ft

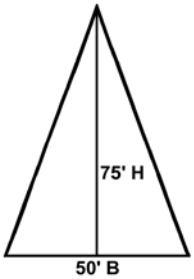

Figure 2-C. Circle

Area = π x Radius x Radius
Area = π x R^2 = 22/7 (3.14)
Area = 3.14 x 20' x 20'
Area = 1,256 sq ft

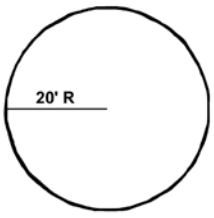

Figure 2-D. Circle (within 5% accuracy)

Area = Diameter x Diameter x 0.8
Area = 0.8 x D^2
Area = 0.8 x 40' x 40'
Area = 1,280 sq ft

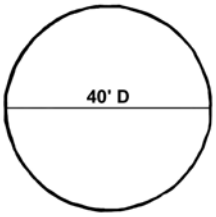

Figure 2-E. Ovals or egg-shaped (within 5% accuracy)

Area = Length x Width at midpoint x 0.8
Area = 0.8 x LW
Area = 0.8 x 20' x 50'
Area = 800 sq ft

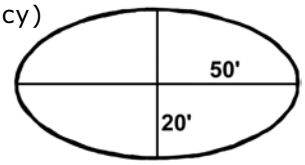

Figure 2-F. Irregular shapes (within 5% accuracy)

- Measure the longest axis of the area (length line).
- At every 10 feet on the length line, measure the width at right angles to the length line.
- Total all widths and multiply by 10.

Area = (A + B + C + D + E + F) x 10
Area = (50' + 75' + 125' + 150' + 75' + 25') x 10
Area = 500 x 10
Area = 5,000 sq ft

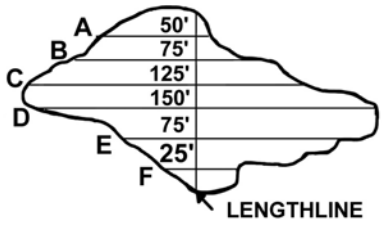

Figure 2-G. Unusual-shaped areas

Calculation should be made for various sections.
In this case, calculate and add together:
Area of triangle
Area of rectangle
½ Area of circle
Total area = total sq ft of area

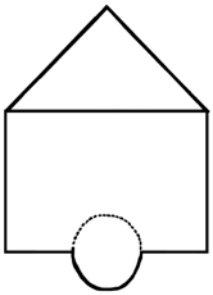

DISCLAIMER: Trade Named Products listed does not imply endorsement over similar products, which may also be available.

Acknowledgments

The authors wish to acknowledge the following sources, certain tables from which were adapted to use in this publication.

- Ball RedBook, 16 ed. 1998. Vic Ball (Ed.) Ball Publishing.
- *Bedding Plants IV.* 1994. J. Holcomb (Ed.) Ball Publishing.
- Cornell Recommendations for Commercial Floricultural Crops, Part 1. Cultural Practices and Production Programs.
- *Greenhouse Operation and Management*, 5th ed. 1998. P. V. Nelson.
- *Hummert's Helphul Hints*, 1999-2000 ed. Hummert International.
- *Installation and Maintenance of Landscape Plants Bedding Plants*. D.A. Bailey and M.A. Powell. 1999. North Carolina State University A&T State University Cooperative Extension. Horticulture Information Leaflet 555.
- *Light and fertilizer recommendations for production of acclimatized potted foliage plants*. C.A. Conover and R.T. Poole, 1984, Foliage Digest (vii) 6: 1-6.
- *Greenhouse Media Lab Acid Addition Calculator to Control Alkalinity in Irrigation Water .*B.E. Whipker, D.A. Bailey, P.V. Nelson, W.C. Fonteno, and P.A. Hammer. Cooperative Extension Services of the Northeast States.
- *Nutrition of Greenhouse Crops, pH and EC Meters – Tools for Substrate Analysis*. 2000. T.J. Cavins, J.L. Gibson, B.E. Whipker, and W.C. Fonteno. North Carolina State University Research Report. Florex.001.
- *Tips on Growing Bedding Plants*, 4th ed. 1999. O.F.A. Services Inc.
- *Tips on the Use of Chemical Growth Regulators on Floriculture Crops.* 1992. O.F.A. Services Inc.
- *Tons to Teaspoons*, L2285, University of California Cooperative Extension Service.
- *Water, Media and Nutrition*. 1996. Alkalinity, pH and Acidification, Chapter 4. David Reed (Ed.) Ball Publishing.

Learning for Life

Bulletin 931 **Reviewed April 2012**

The University of Georgia and Ft. Valley State University, the U.S. Department of Agriculture and counties of the state cooperating. Cooperative Extension, the University of Georgia College of Agricultural and Environmental Sciences, offers educational programs, assistance and materials to all people without regard to race, color, national origin, age, gender or disability.

The University of Georgia is committed to principles of equal opportunity and affirmative action.